oToBrite



Automotive Visual Inertial Odometry (VIO) Camera

oToCAM269IMU-C120M

Overview

The Visual-Inertial Odometry (VIO) camera compensates for device vibrations by using the Kalman filter to process acceleration and angular velocity data, ensuring stable image output and improved distance measurement accuracy. In low-light, high-speed, or complex environments, it boosts positioning accuracy, enhancing functions like LKA (Lane Keeping Assistance) with precise 3D positioning and posture estimation.

By integrating an IMU (Inertial Measurement Unit) and achieving 1ms synchronization with image data, it ensures accurate alignment, improving navigation and obstacle avoidance for autonomous robots and unmanned vehicles.



oToCAM269IMU-C120M

Specifications

• General Specifications

Item	Specifications
Image sensor	CMOS (Sony ISX031)
Optical Format	1/2.42"
Pixel Size	3.0 µm (H) × 3.0 µm (V)
Camera output pixel number	2.95M (1920 (H) × 1536 (V))
Color filter array	RGGB
Output Interface	GMSL2 with POC
Output Formats	MIPI 4lane YUV422 8bits
S/N ratio	TBD
Power source (POC)/Typical	DC 6 ~ 12V/6V
Startup time of power in	Within 200ms
Frame rate (default)	30 fps (By setting)
Serializer	MAX9295
Camera Current Consumption	≦ 120mA @12V
Operating Temperature	-40°C ~ +85°C
Storage temperature Range	-40°C ~ +95°C
Waterproof	IP 67/IP 69K
Data Frame Sync.	<10ms

• IMU Information

Item	Information
Sensor	ASM330LHH
Accelerometer	3 Axis Raw Data
	Full scale range ±2g
	Zero point error ±80mg
	Frequency response 417 Hz
	Resolution sensitivity 0.061 mg
	Noise Density 200 μg/√Hz
Gyroscope	3 Axis Raw Data
	Full scale range ±2000 dps
	Zero point error ±10dps
	Frequency response 417 Hz
	Resolution sensitivity 70 mdps
	Noise Density 12 mdps/√Hz
Pose estimation	Pitch、Yaw、Rol
Output Data Rate	120Hz

• Product Specifications (by models)

Item	oToCAM269IMU-C120M
View angle (H)	120.6°
Lens F No.	F2.0
Lens structure	2G4P+IR
IR cut edge	400 ~ 700 nm
DOF/ Object distance	1M~inf.@Inf.
Resolution (Center/Corner)	TV line Center ≧ 1000、 corner (0.65F) ≧900
Dimensions	28*35*45.7 mm (exclude FAKRA connector)
Weight	50g

Outline Drawing

- oToCAM269IMU-C120M Mechanical Dimensions

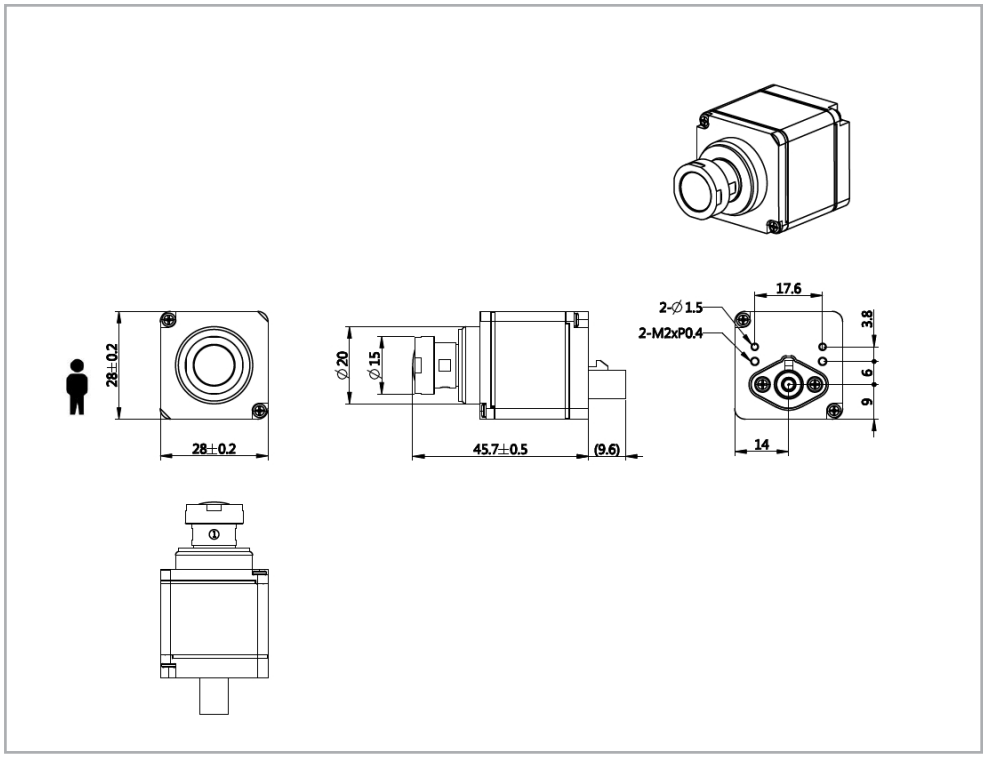

driving easier and safer

9F-2, No. 8, Keyan Rd., East Dist., Science-Based Industrial Park,
Hsinchu, Taiwan (R.O.C.)

+886-(0)3-666-7968 | sales@otobrite.com | www.otobrite.com